ROBOT PUMPS

OPERATION
&
MAINTENANCE MANUAL

BW/BD-SERIES

(supplied without motor)

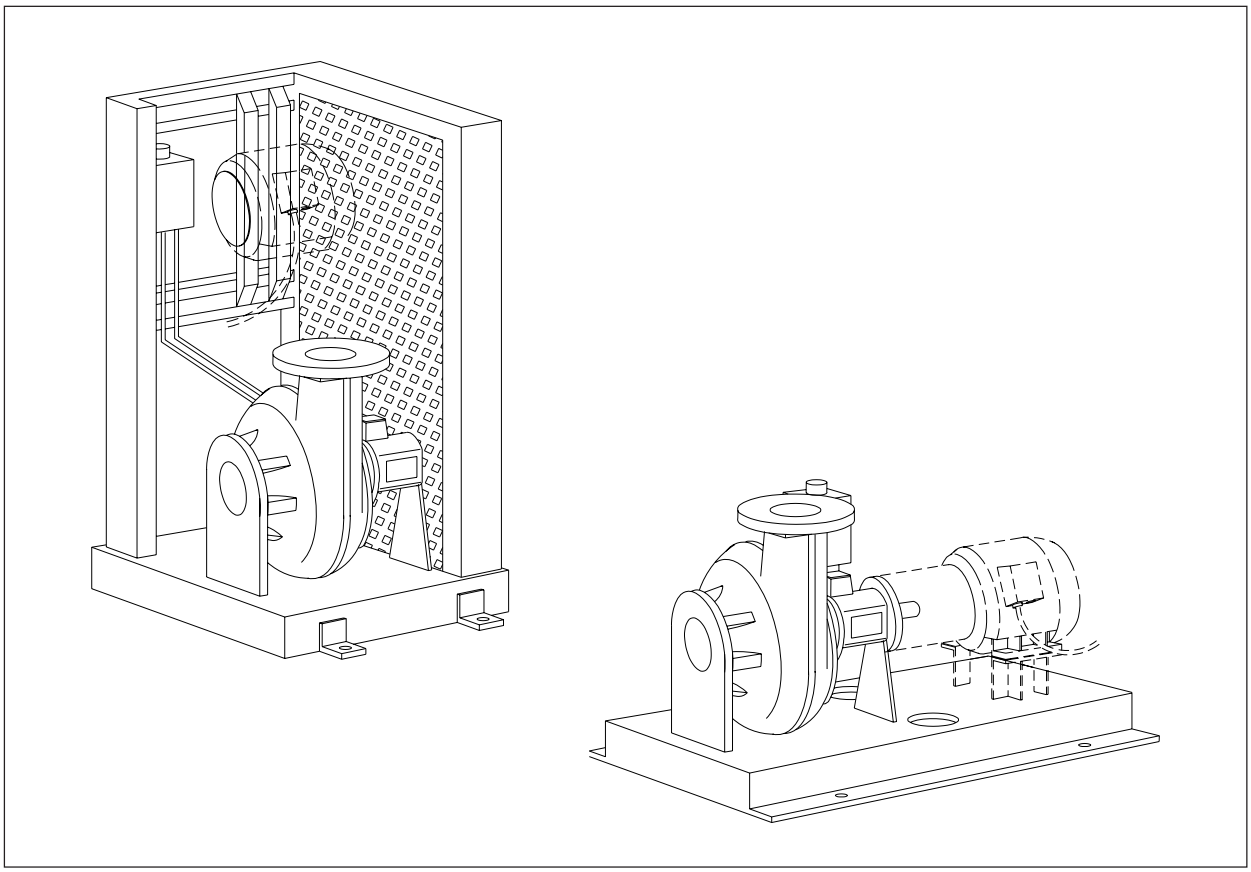

EC- CERTIFICATE OF CONFORMITY FOR MACHINERY

(Directive 98/37/EEC, Annex II, sub B)

BAN ON PUTTING INTO SERVICE

ITT W&WW Alphen B.V.
Produktieweg 5
P.O. Box 140
2400 AC Alphen aan den Rijn
The Netherlands

Herewith declares that:

Pump type BW or BD ,

dataplate

is destined to be incorporated in other machines or to be combined with other machines, and is not (entirely) in compliance with the Machinery Directive 98/37/EEC.

The Netherlands, Alphen aan den Rijn,

F. Visser, Managing Director

Contents ..... page

1. FOREWORD 4
2. GUARANTEE 4
3. SAFETY AND ENVIRONMENT 5
3.1 Symbols 5
3.2 General safety instructions 5
3.3 Environment 5
4. TECHNICAL DATA 6
4.1 General 6
4.2 Main parts 6
4.3 Sound level 7
5. CHECK POINTS BEFORE INSTALLATION 8
5.1 Delivery check 8
5.2 Oil level 8
5.3 Pump seals 8
5.4 Installation parts 8
5.5 Drive 8
6. FIRST PUMPSTART 9
6.1 Direction of rotation 9
6.2 Current-check 9
6.3 Start frequency 9
7. INSTALLATION OPTIONS 10
7.1 General 10
7.2 Installation -H 10
7.3 Installation -V 11
7.4 Installation -K 12
7.5 Maximum flange forces and moments 13
8. MAINTENANCE 14
8.1 General 14
8.2 Maintenance schedule 14
8.3 Lubricants 14
8.4 Oil level 14
8.5 Oil change 14
8.6 Flexible coupling 15
9. TRANSPORT AND STORAGE 17
10. OPTIONS 17
11. TROUBLE SHOOTING 18
APPENDIX 1; Dataplate 19
APPENDIX 2; Example of a direct start (DOL) diagram 20
APPENDIX 3; Example of a star-delta start (YD) diagram 21
APPENDIX 4; Notes 22

1. FOREWORD

You are to be congratulated on choosing a ROBOT pump, which will undoubtedly serve you both reliably and economically for a long time, providing you observe the Maintenance Instructions given in this manual.
The BW/BD-pump is a Non-clogging Vortex pump designed to pump sewage and other solids containing wastewater.
Proper use and maintenance will prolong the operational life of your pump.
This manual contains different warnings and safety precaution.

Read this manual properly, so that dangerous situations, physical injury or damage can be avoided.

The BW/BD-pump is designed for professional use only. Service and maintenance may only be done by authorized personnel, after reading this manual.

This pump is destined to be incorporated in other machines or to be combined with other machines, and is therefore not (entirely) in compliance with the Machinery Directive 98/37/EEC.

Before operating the pump, be sure that the machine in which you incorporate this pump is declared to be in compliance with the Machinery Directive 98/37/EEC.

2. GUARANTEE

We refer to the warranty agreement with your local dealer.

When ordering spareparts, always quote.

1. Pump type
2. Code
3. Serial number

This information is found on the dataplate.
(See appendix 1)
Sectional drawings and partslists are available on request.
All products manufactured by ITT W&WW Alphen B.V. are made with great care and according to our high internal standards. Should you however have any suggestions concerning our pump range or this instruction manual which will contribute to the quality of our product please do not hesitate to contact us.

ITT W&WW Alphen B.V.
Produktieweg 5
P.O. Box 140
2400 AC Alphen aan den Rijn
The Netherlands

Tel.: +31 172 418686
Fax.: +31 172 418602

3. SAFETY AND ENVIRONMENT

3.1 Symbols

* In this manual

General warning
Danger !

Electrical hazard !

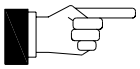

Attention !

* On the pump

Danger of physical injury
Rotating parts !

Electrical hazard !

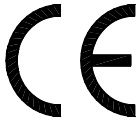

EC-conformity symbol

3.2 General safety instructions

* Only trained and authorized personnel may install and maintain the pump after carefully reading this manual.
* Only use the pump for its intended purpose and under the regulated circumstances.
* Don’t go near rotating parts.
* Clean the pump before maintenance and inspection.
* Observe the local regulations when working with agressive, corrossive, toxic, flammable and explosive chemicals.
* Never remove safety signs, keep them clean.
* Always connect to a grounded circuit.
* Before maintenance and inspection always disconnect the pump from the mains.
* Use a proper hoist for lifting and handling the pump.
* Never drop the loose cable end in water.

3.3 Environment

Parts which are replaced during repair, maintenance or renewal, could contain materials which could be harmful to the environment.
Please take care in the disposal of these parts.
Do this in accordance with the local environmental regulations.

4. TECHNICAL DATA

4.1 General

The BW- and BD-pumps are vortex impeller pumps, designed to pump a wide variety of solids contaminated liquids.
The hydraulic components of the BD-pumps are made in NIHARD IV.
These pumps are suitable for dredging, mining and other industrial applications.
The impeller leaves a wide unobstructed passage through the volute, in which a strong vortex is created that carries most of the solids.

Construction:

- Two independent shaft seals, running in oil.
- Heavy duty bearings, greased for life.
- Clog-free vortex impeller.
- Vanes at the backside prevent solids entering the seal area and reducing the pressure on the seal.

4.2 Main parts

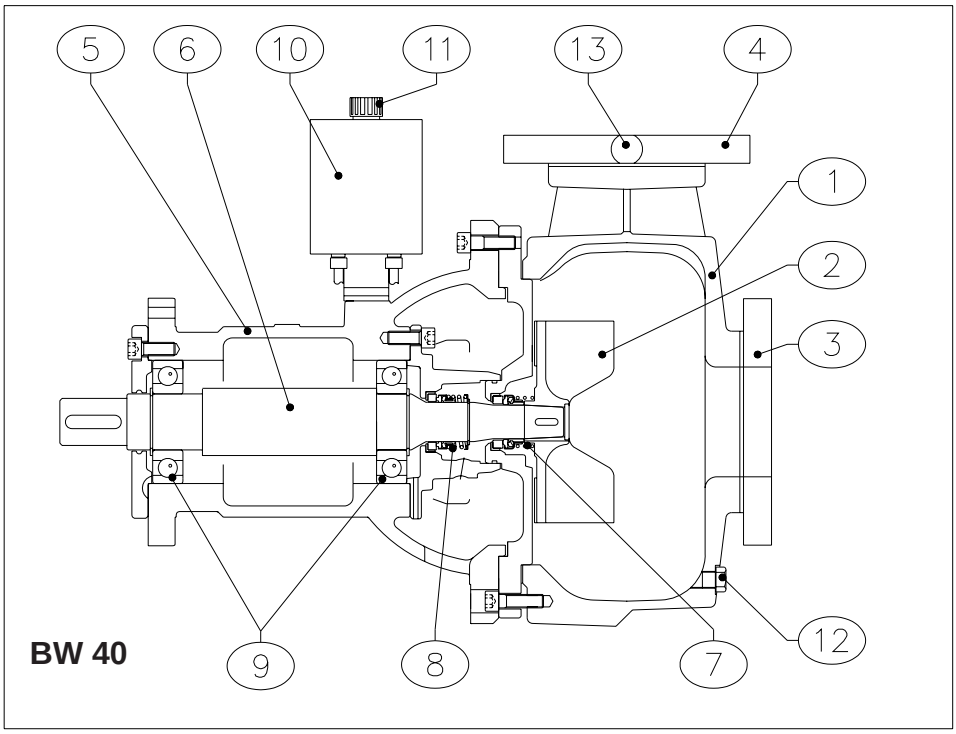

1 Pump casing
2 Impeller
3 Suction
4 Delivery
5 Bearing housing
6 Pump shaft
7 Mechanical seal pump side
8 Seal driven side
9 Bearing
10 Oiltank
11 Oil plug with gauge rod
12 Drain plug
13 Connection pressure gauge

4.3 Sound level

Depending on duty point and speed, the pump will produce a certain sound level.
Next to this the piping system may produce some noise and vibration.
By altering the pipe support and using rubber compensators the vibration will be reduced.

In the next table the sound levels of the BW- and BD pumps are shown.

Sound levels BW and BD pumps

Type	Speed [rpm]	Sound level [dB]
BW20	960-2900	<70
BW40	960-2900	<70
BW60	960/1450	<70
BW60	2900	<80
BW3000	960-1450	<70
BW3000	2900	<80
BW5000	960-1450	<70
BW6000	960-1450	<70
BD40	960-1450	<70
BD60	960-1450	<70

5. CHECKPOINTS BEFORE INSTALLATION

After unpacking the pump, carry out the following check points:

5.1 Delivery-check

Check for possible transport damage.
Check for complete delivery.

When the delivery is incomplete or damaged, please contact your dealer immediately.

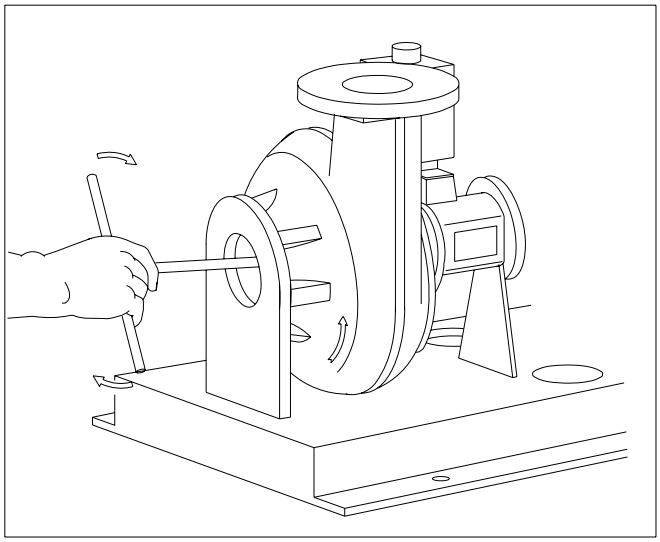

Fig. 5.1

5.2 Oil level

Check the oil level in the oil tank.
The oil plug has a gauge rod and the level should be between the 2 marks.

5.3 Pump seals

Turn the impeller clockwise by hand, using a proper socket wrench (see fig. 5.1).
With this procedure sticking mechanical seal surfaces will be loosened smoothly.

5.4 Installation

Check if all components for your installation are delivered.
See also chapter 6.

5.5 Drive

The pump can be driven by an electro motor, an hydraulic motor or an internal combustion motor.

It is prohibited to put the pump into operation before the machine which it becomes part of, is declared to be conformed with the Machinery Directive.

6. FIRST PUMPSTART

6.1 Direction of rotation

A correct direction of rotation is essential for proper operation.
Check the direction of rotation with the arrow on the pumpcasing.
This can be done by observing the direction of rotation of the motor or coupling.

6.2 Current-check

When the pump is driven by an electro motor, the current must be checked during normal operation.

Apply an ammeter to one of the phase wires and check that the current is not higher than the value on the motor dataplate. If so, check for:

- low voltage ?
- Specific gravity or viscosity too high ?
- blocked volute ?
- direction of rotation correct ?
- too large impeller diameter or too small motor.

If the problem cannot be solved contact your dealer.

6.3 Start frequency

When the pump is driven by an electro motor and controlled by level regulation, the on- and off- levels should be adjusted in such a way that the pump does not make more than 20 starts per hour.

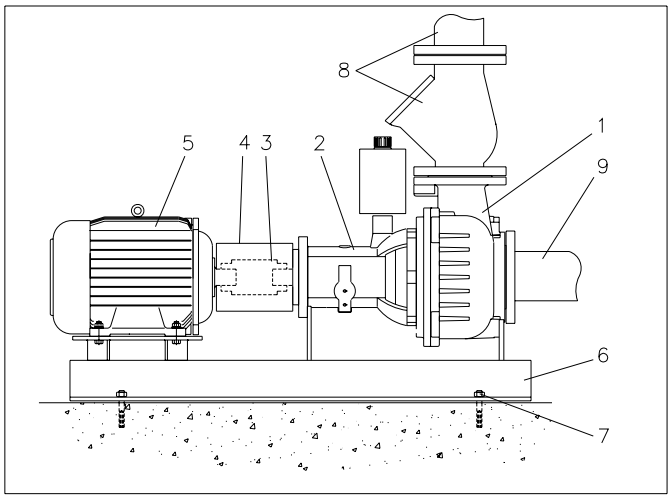

Fig. 7.1

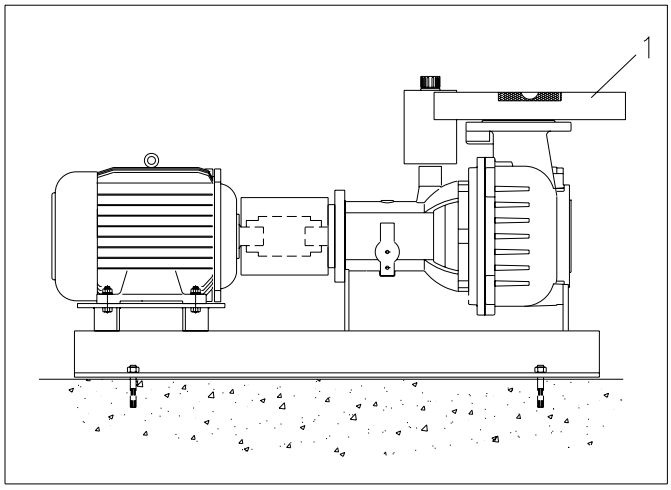

Fig. 7.2

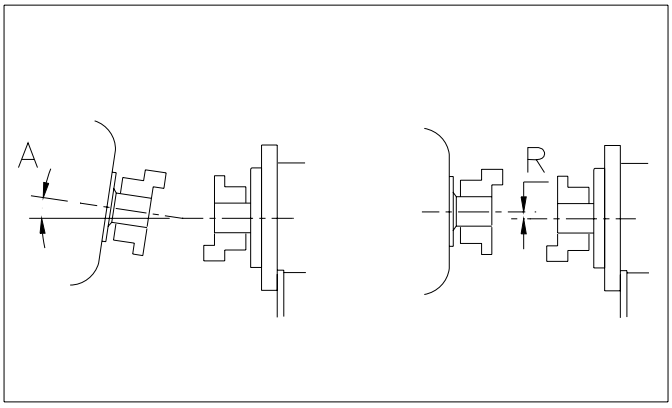

Fig. 7.3

7. INSTALLATION OPTIONS

7.1 General:

For the BW/BD pumps the following installations are possible:

-H	Horizontal, on base plate
-V	Vertical, on support
-K	V-belt driven

7.2 Installation - H

Horizontal installation on base plate.
See fig. 7.1
The main parts are:

1. pump unit;
2. bearing unit;
3. flexible spacer coupling;
4. protection hood;
5. electro motor;
6. base plate;
7. fixing bolts;
8. delivery pipe;
9. suction pipe;

Checkpoints before operation:

- fixation of the base plate to the floor, see fig. 7.1 pos. 7.
- flanges straight horizontal and vertical see fig. 7.2 pos 1.
- pump and motor shaft aligned, see 7.2.1.
- Maximum flange forces and moments, see 7.5.
- adjust start and stop levels in such a way that the pump does not make more than 20 starts per hour.

7.2.1 Alignment of pump and motor shaft

After the base plate is fixed to the floor, the alignment of pump and motor shaft must be checked.
When the base plate is fixed to the floor, forces on the base plate might have disturbed the alignment .
Remove the protection hood, (see fig. 7.1 pos 4).

Check for: 1. radial deflection (R)
2. angular deflection (A)

See fig. 7.3.
For max. allowable deflection consult the documentation of the coupling manufacturer.

For the coupling supplied by Robot Pumps the values are:

1. radial deflection (R) max. 0.4mm.
2. angular deflection (A) max. 1°

To correct the alignment, use skims underneath the motor and pump fixing bolts.

Re-install the protection hood in the original position.

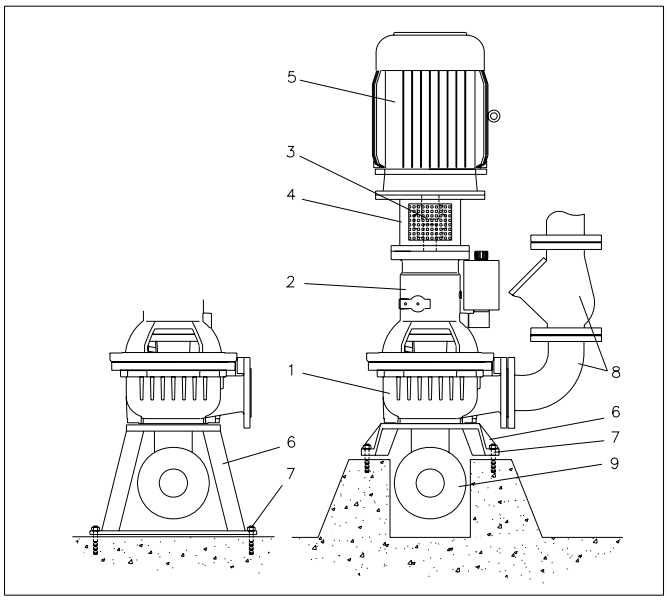

Fig. 7.4

7.3 Installation -V

Vertical installation on support.
See fig. 7.4.

The main parts are:
1. pump unit;
2. bearing unit;
3. flexible coupling;
4. motor support;
5. electro motor;
6. pump support;
7. fixing bolts;
8. delivery pipe;
9. suction pipe;

Checkpoints before operation:

- fixation of the base plate to the floor, see fig. 7.4 pos. 7.
- flanges straight horizontal and vertical
- Maximum flange forces and moments, see 7.6.
- adjust start and stop levels in such a way that the pump does not make more than 20 starts per hour.

In case of a construction without a fixed motor support like fig. 7.4 the alignment of the coupling should be checked. See 7.2.1.

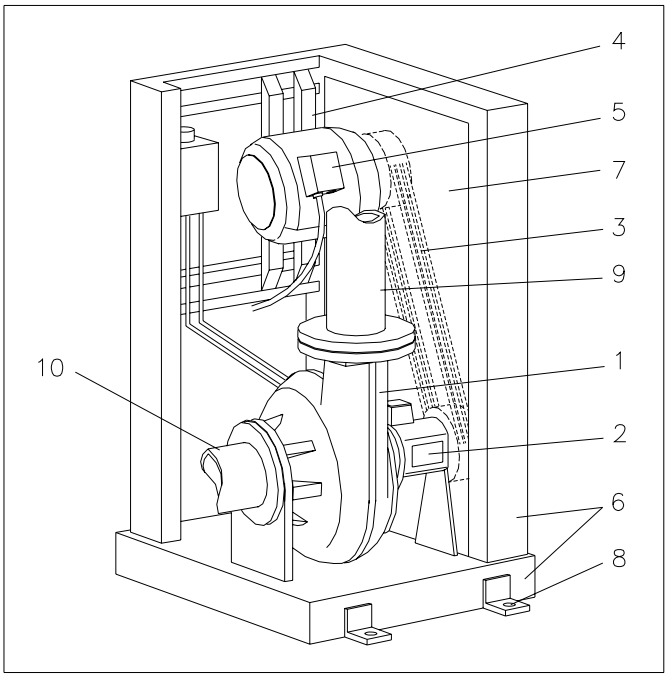

Fig. 7.5

7.4 Installation -K

V-belt driven with high placed motor and frame.
See fig. 7.5.

The main parts are:
1. pump unit;
2. bearing unit;
3. pulleys;
4. tensioner;
5. electro motor;
6. frame;
7. protection plate (2x);
8. fixing bolts (4x);
9. delivery pipe;
10. suction pipe;

Checkpoints before operation:

- fixation of the base plate to the floor, see fig. 7.5 pos. 8.
- flanges straight horizontal and vertical
- Maximum flange forces and moments, see 7.5.
- adjust start and stop levels in such a way that the pump does not make more than 20 starts per hour.
- correct tension of the V-belts. see . 7.4.1

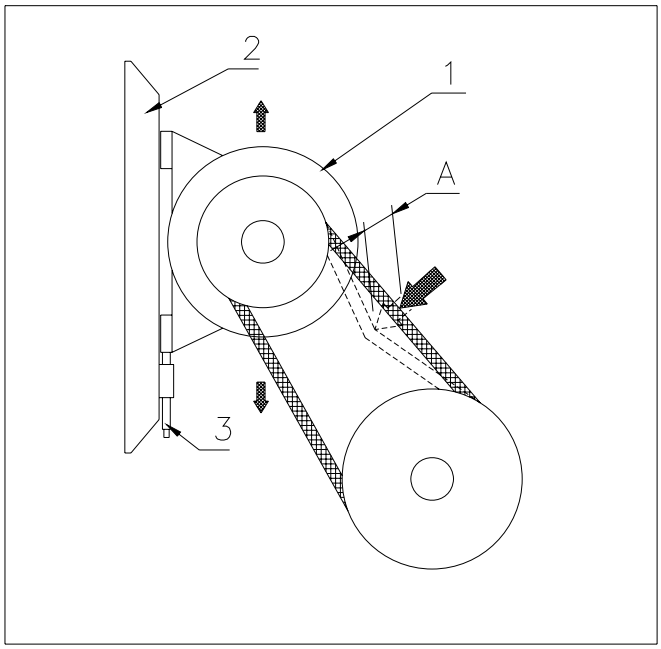

Fig. 7.6

7.4.1 Tension of the V-belts

Check the correct tension of the V-belts as follows:.
Remove one of the protection plates.
Put a force of 75N on one of the V-belts in the middle of the 2 pulleys, see fig 7.6.
The pressing-in (A) must be about 1 cm .
Is the value too small (tension too high), move the electro motor (1) downwards.
Is the value too high (tension too low), move the electro motor upwards.
The difference between the 3 belts may not be more than 0.5 cm. In that case renew all 3 V-belts.

To move the electro motor, use the tensioning rail (2) .
Place both tensioners (3) underneath the motor. Loosen the motor fixing bolts a bit, and screw-in the tensioners (taut) or screw-out (slack), until the correct tension is reached.
Retension the fixing bolts of the motor, and recheck the tension again.

Check afterwards if both pulleys are still aligned (see Fig.7.7).

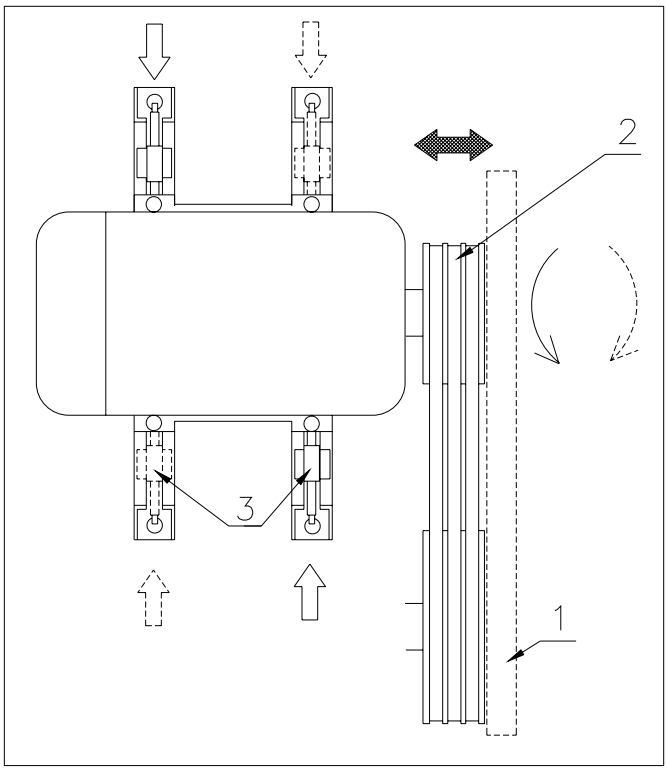

Fig. 7.7

Use a ruler (1) to align the pulleys (2).
If necessary the motor pulley can be moved on the shaft. Loosen the 3 cup screws from the hub and push the pulley towards the motor to set it free from the shaft. Move the pulley to the right position and fasten the cup screws.
Check the alignment again and repeat until the right position is achieved.
When the motor shaft is not parallel to the pump shaft, the motor can be rotated as shown in fig.7.7. Loosen the motor fixing bolts and use the tensioners (3) to rotate the motor. If necessary, one of the tensioners can be placed into the rail above the motor.
Check the correct tension of the V-belts!
Replace the the protection plate.

The pump is now ready to use.

7.5 Maximum flange forces and moments

Because of the pipe line system, specific forces on the discharge and suction flanges will occur.
See Fig. 7.8:

1. forces Fx, Fy en Fz
2. moments Mxy, Mxz en Myz

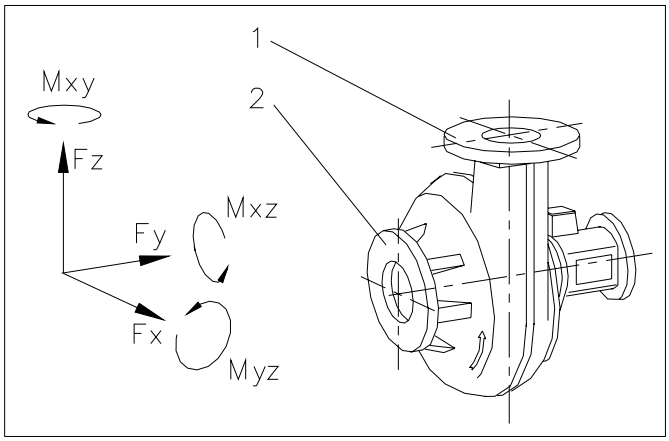

Fig. 7.8

The forces and moments may not exceed the values from the table below:

Pump type	Fx [N]	Fy [N]	Fz [N]	Mxy [Nm]	Mxz [Nm]	Myz [Nm]
BW20	1000	1000	2000	900	900	1000
BW40	1200	1200	2500	1000	1000	1100
BW60	1200	1200	2800	1100	1100	1200
BW3000	1200	1200	2500	1000	1000	1100
BW5000	1200	1200	2500	1000	1000	1100
BW6000	1200	1200	2800	1100	1100	1200
BD40	1200	1200	2500	1000	1000	1100
BD60	1200	1200	2800	1100	1100	1200

8. MAINTENANCE

8.1 General

Always disconnect the pump from the mains before inspection or disassembly.

Clean the pump thoroughly.

8.2 Maintenance schedule

* After the first 20 running hours:
- Check the oil (see chapter 8.4).
  If there is more than a few drops of water in it, contact your dealer.

* Every 6 months or 500 running hours:
- Check the oil (see chapter 8.4).
  If there is more than a few cm^3 water in it, contact your dealer.

- Refresh the oil every year or when it is no longer transparent. (see chapter 8.5)

8.3 Lubricants

* The bearings are greased for life and need no refill.

* The oil reservoir is filled with ExxonMobil Marcol 152 or an equivalent.
Viscosity: 32 cSt.
When another kind of oil is used this is marked on a label on the pump.

8.4 Oil level

Check the oil level in the oiltank.
The oil plug has a gauge rod and the level should be between the 2 marks.

8.5 Oil change

Collection, storage and removal of the oil should be done according to the regulations of the local authorities.

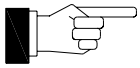

Always use the right kind of oil!

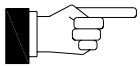

To drain the oil, remove one of the oil pipes, or use the drain pipe (not applicable for all types).

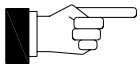

We advise to flush the system with fresh oil, before filling it up.

8.6 Flexible coupling

Between motor and pump a flexible coupling should be used to absorb vibrations and mis-alignment. Also the dismounting of the bearing housing or motor will become easy.
(Not appicable for version -K)
For maintenance and renewal of elastomers, consult the documentation of the manufacturer.

For a coupling supplied by Robot Pumps, see 8.6.1 and 8.6.2. For version -V see 8.6.3 and 8.6.4

When working on the pump make sure it cannot start unexpectedly !

8.6.1 Flexible coupling installation -H

To check the coupling remove the protecting hood.
Check if the spacer (4) has not too much clearance with regard to the flanges (1). Remove the rings (2) and check the elastomers (3) for wear. Renew if necessary. Check the metal parts (1) and (4) for wear and renew if necessary (see 8.6.2).
Check the alignment of motor- and pump shaft by using a ruler at the 2 flanges. Measure at several points.
Check for:

1. radial deflection (R) max. 0.4mm.
2. angular deflection (A) max. 1°

See fig. 8.1.

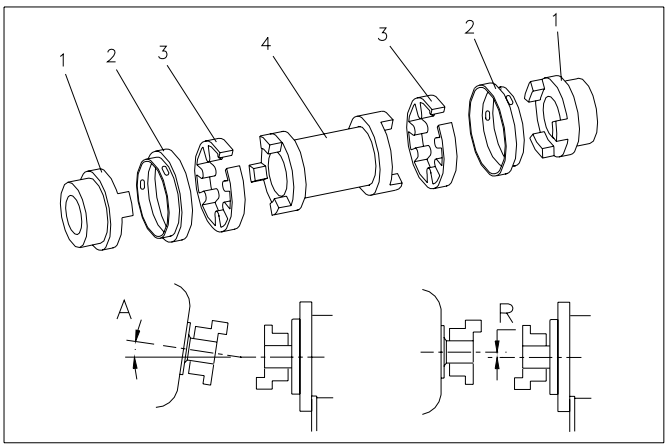

Fig. 8.1

To correct the alignment, use skims underneath the motor and pump fixing bolts.

Re-install the spacer, elastomers, rings and protecting hood.

8.6.2 Renewal of the coupling -H

If necessary the coupling can be renewed as follows:

1. Remove the rings (2) and elastomers (3).
2. Remove the spacer (4).
3. Loosen the cup screws from the flanges (1) and pull the flanges from the shaft with a proper tool.
4. Heat-up the new flanges and put them on the shafts. The distance between the flanges must be about 5mm more than the lenght of the spacer (4). Fasten the cup srews from the flanges.
5. Check the alignment of motor and pump shaft (see 8.6.1)
6. Place the new spacer, elastomers and rings.
7. Replace the protecting hood.

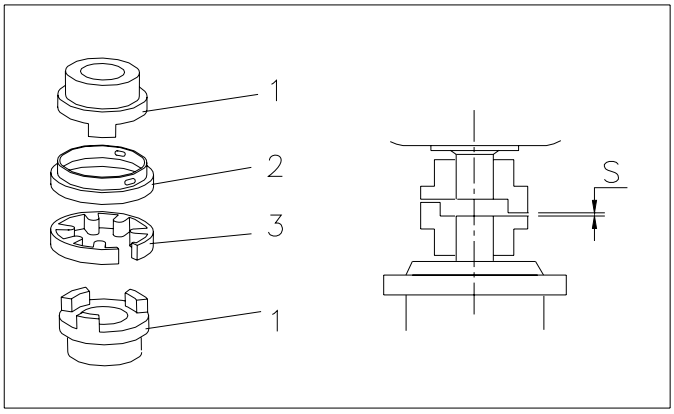

Fig. 8.2

8.6.3 Flexible coupling installation -V

To check the coupling remove the protecting hoods from the motor support.
See Fig. 8.2
Check if the coupling has not too much clearance with regard to the flanges (1).
Remove the srcews from the ring (2) and lift it.
Remove the elastomer (3) and check for wear.
Renew when necessary.
Check the flanges for wear.
Check if the distance between the flanges is between 2 and 4 mm.
Replace elastomer, ring and protecting hoods.

8.6.4 Renewal of the coupling -V

If necessary the coupling can be renewed as follows:

1. Remove the protecting hoods from the motor support and remove the srcews from the ring (2) and lift it.
2. Remove the elastomer (3).
3. Remove the motor fixing bolts and lift the motor.
4. Loosen the cup screws from the flanges (1) and pull the flanges from the shaft with a proper tool.
5. Heat-up the new flanges and put them on the shafts at the same position as the old ones.
6. Fasten the cup srews from the flanges and replace the motor. Don’t forget to place the ring (2) !
7. Check if the distance between the flanges is between 2 and 4 mm.
8. Place the new elastomer.
9. Replace ring and protecting hoods.

9. TRANSPORT AND STORAGE

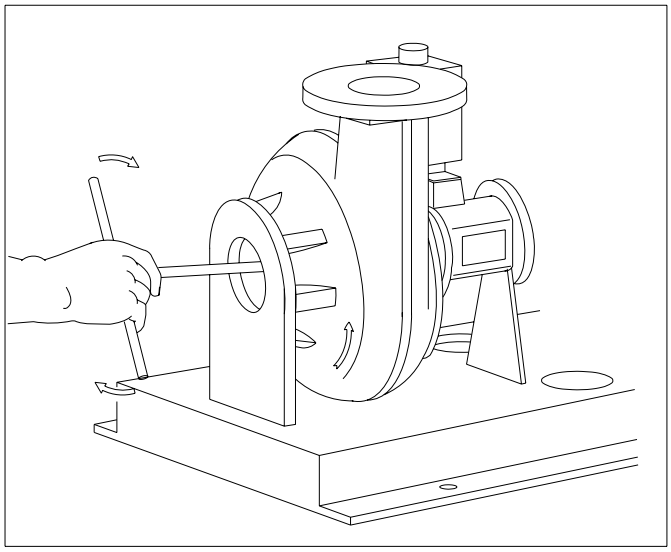

Fig. 9.1

Always use a proper hoisting tool for lifting the pump.

To avoid oil spil, the pump must be transported and stored in the same position as the installation. Or a sealing plug should be used for the oil tank.

In case of long storage, the pump must be protected against moisture and heat.

Before storing the pump clean it with a waterjet.

On a regular base (every three months), turn the impeller by hand, this is necessary to prevent sticking of the mechanical seal surfaces (see Fig. 9.1).

After 6 months of storage, a general inspection is advised, before installing the pump.

10. OPTION

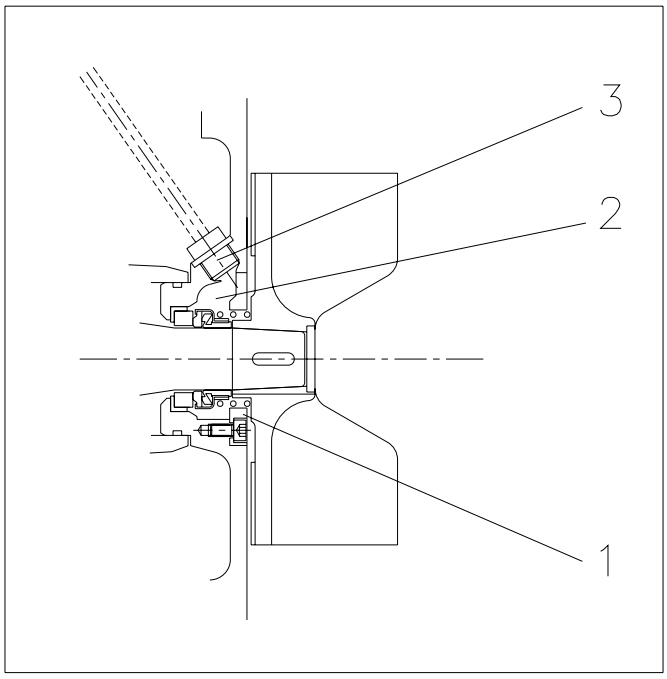

Fig. 10.1

The pump can be delivered with a seal flushing connection. See fig.10.1
A ring (1) is mounted in the seal housing, with a small fitting around the impeller hub or sealing parts.
The flushing water inlet is connected to (3).
The flushing water keeps the sealing room (2) behind the impeller free from the pumped liquid.
We advise to use an electro magnetic valve and a flow indicator in the flushing system so to be sure to have flushing water during pump operation.
The needed flushing pressure must be at least 2/3 of the pump pressure.
When your pump is equipped with seal flushing this can be found on the dataplate. See appendix 1: at position 9, a “F” is stamped.

11. TROUBLE SHOOTING

11.1 Safety

When working on the motor, make sure that the power is switched off.

When working on the pump make sure it cannot start unexpectedly!

Only qualified electricians may do the electrical work.

When starting the pump ensure nobody goes near rotating parts.

Observe local electrical and safety regulations!

PROBLEM	POSSIBLE CAUSE	REQUIRED ACTION	CHECKPOINTS
Pump does not start	No voltage on motor terminals	Check power supply	* No power * Main isolator switch * Fuses
		Check motor protection	* Earth leakage relay * Motor protection relay * Motor temperature * Water detector
		Check start-and stop signals	* Too low waterlevel * Obstructed level switches * Switches interchanged * Control panel
	Motor failure	Check motor wiring	* Continuity and isolation * Phase resistance
Pump does not stop	No stop signal	Check level regulation	* Float switches * Control panel
	Wrong start- and stop level	Check level regulation	* Obstructed level switches * Adjust start- and stop level * Power supply not stable
Pump starts and stops repeatedly	Fault in power supply	Check power supply	* Low voltage * Not all 3 phases available * Setting of motor protection
	Motor overloaded	Check pump	* Wrong direction of rotation * Impeller blocked * Protection in automatic reset mode
	Motor overheated	Check cooling Check motor	* Continuity and isolation * Fuses
Current too high	Fault in power supply	Check power supply	* Low voltage
	Pump failure	Check pump	* Impeller blocked * Viscosity or spec. gravity too high * Wrong direction of rotation
Pump runs but no flow or too low flow	Clogging or air lock	Check discharge	* Discharge obstructed * Valve fully or partly closed * Air pocket in pump or discharge
	Pump failure	Check pump	* Impeller or volute blocked * Pump is sucking too much air * Worn or broken impeller
	Fault in power supply	Check power supply	* Control panel * Fuses * Low voltage
	Too low capacity	Check discharge	* Discharge obstructed * Valve fully or partly closed * Air pocket
High level alarm	Pump failure	Check pump	* Impeller or volute blocked * Pump is sucking too much air * Worn or broken impeller * Worn or broken bearings
	Fault in power supply	Check power supply	* Fuses * Control panel
	Motor failure	Check motor	* Continuity and isolation

APPENDIX 1; Dataplate

The main characteristics of the pump are given on the dataplate.
At the first page of this book a label is found containing all the relevant information.

The dataplate can be found at one side of the bearing housing.

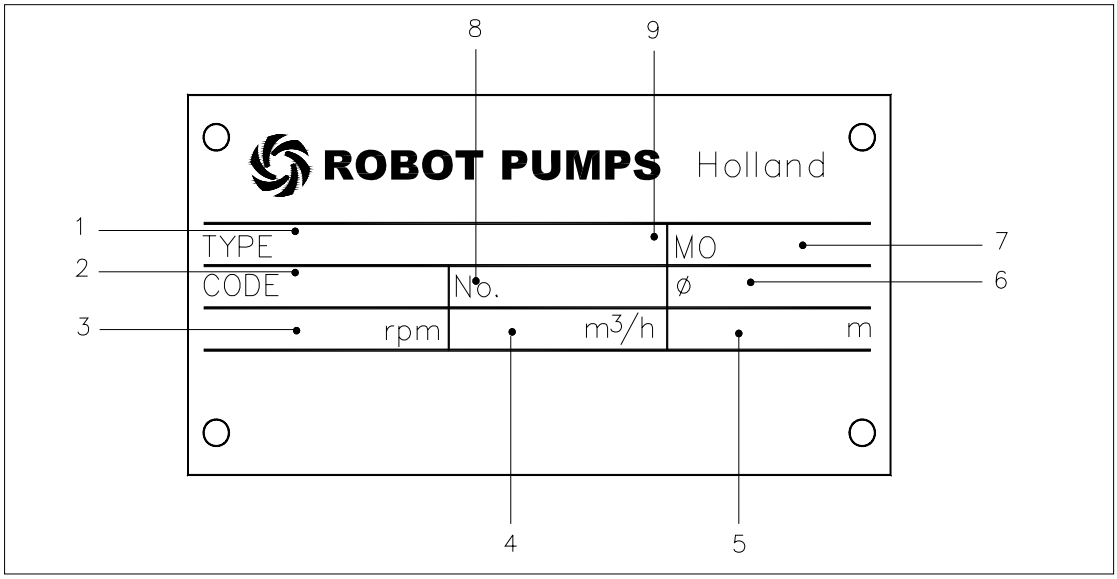

Nr.	Description	Dimension	Remarks
1	Pump type		
2	Pump code		
3	Pump speed	rpm	
4	Flow in duty point	m^3/h	
5	Head in duty point	mlc	
6	Impeller diameter	mm	
7	Factory code		
8	Serial number		first 2 numbers are year of production
9	Options		F=seal flushing, 1=shaft in AISI316 2=Viton elastomers, 4=impeller in AISI316 5=hardened impeller, 6= impeller in Bronze

APPENDIX 2; Example of a direct-on-line connection diagram

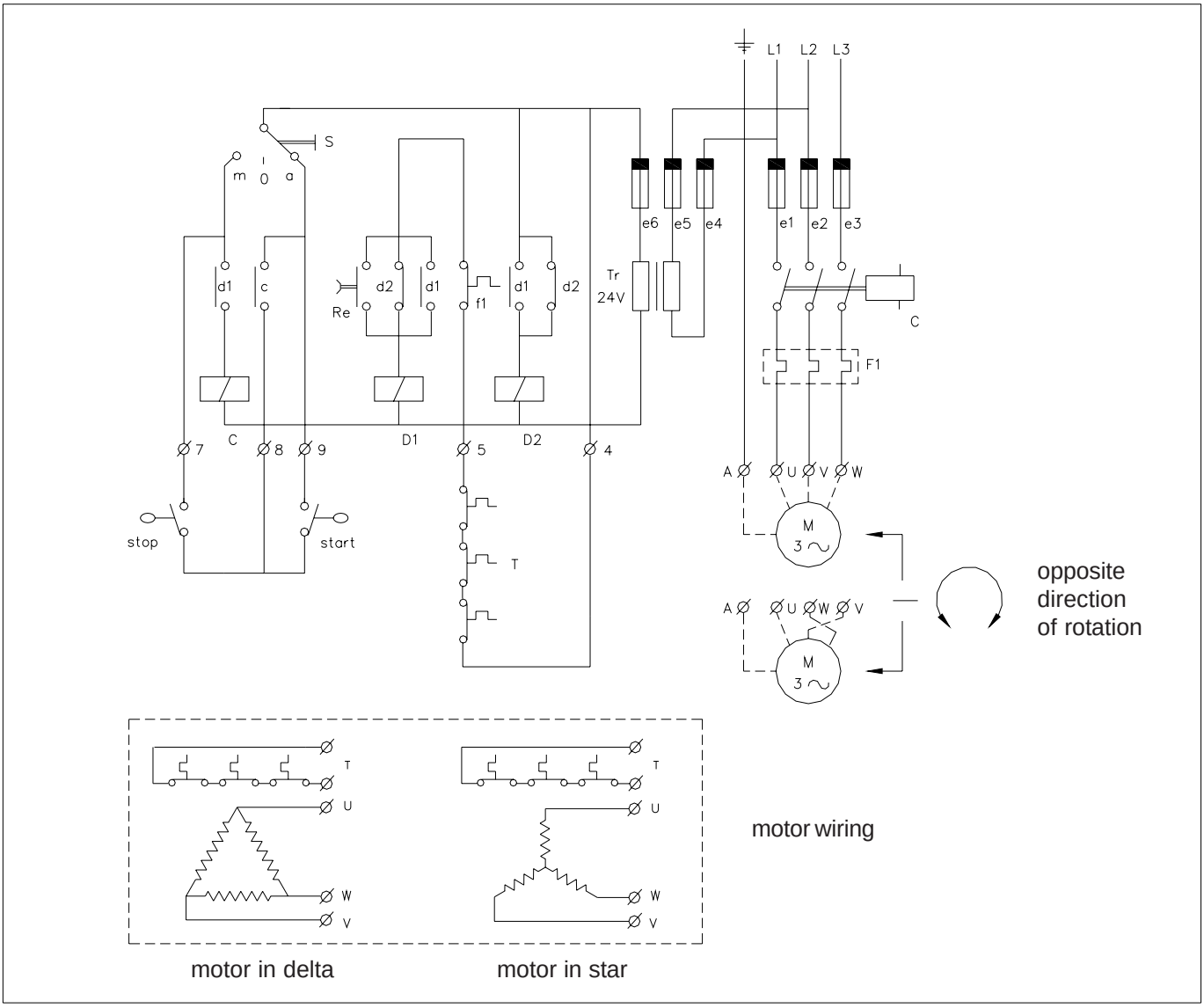

CODING	
e1, e2, e3	Line fuses
e4, e5	Fuses, primary control-circuit
e6	Fuses, secondary control-circuit
C	Main contactor
F1	Motor protection circuit breaker with manual reset
D1	Auxiliary relay for motor protection
D2	Auxiliary relay for power failure
Tr	Transformer
S	Manual-off -auto selector switch
Start	Level switch pump start
Stop	Level switch pump stop
Re	Reset push button
M	Pump motor
T	Thermostats (if fitted)

APPENDIX 3; Example of a star-delta connection diagram

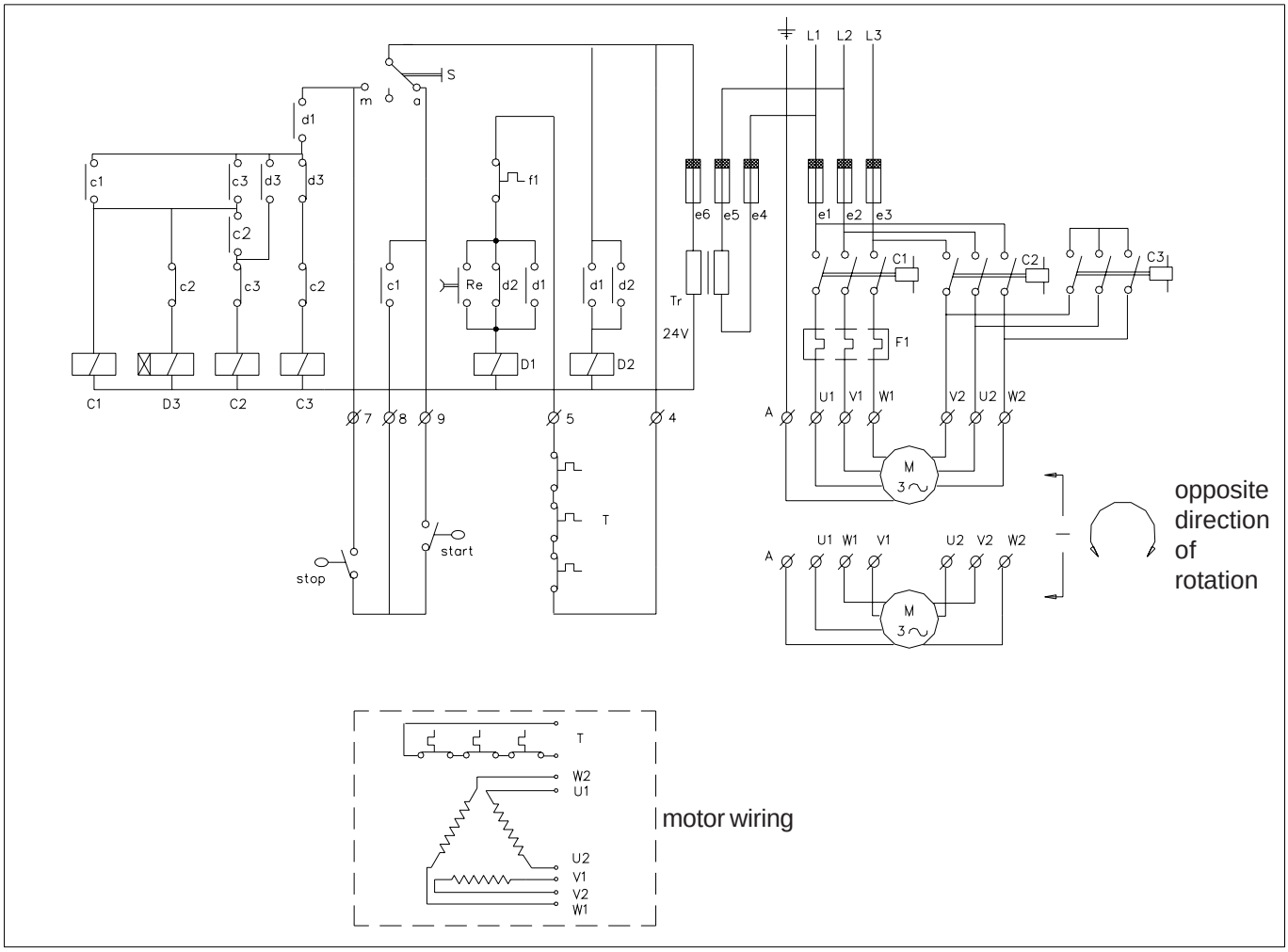

CODING	
e1, e2, e3	Line fuses
e4, e5	Fuses, primary control-circuit
e6	Fuses, secondary control-circuit
F1	Motor protection circuit breaker with manual reset
C	Main contactor
D1	Relay delta connection
D2	Relay star connection
Tr	Transformer
S	Manual-off-auto selector switch
Start	Level switch pump start
Stop	Level switch pump stop
Re	Reset push button
M	Pump motor
T	Thermostats (if fitted)

APPENDIX 4; Notes:

Name	Date	Remarks